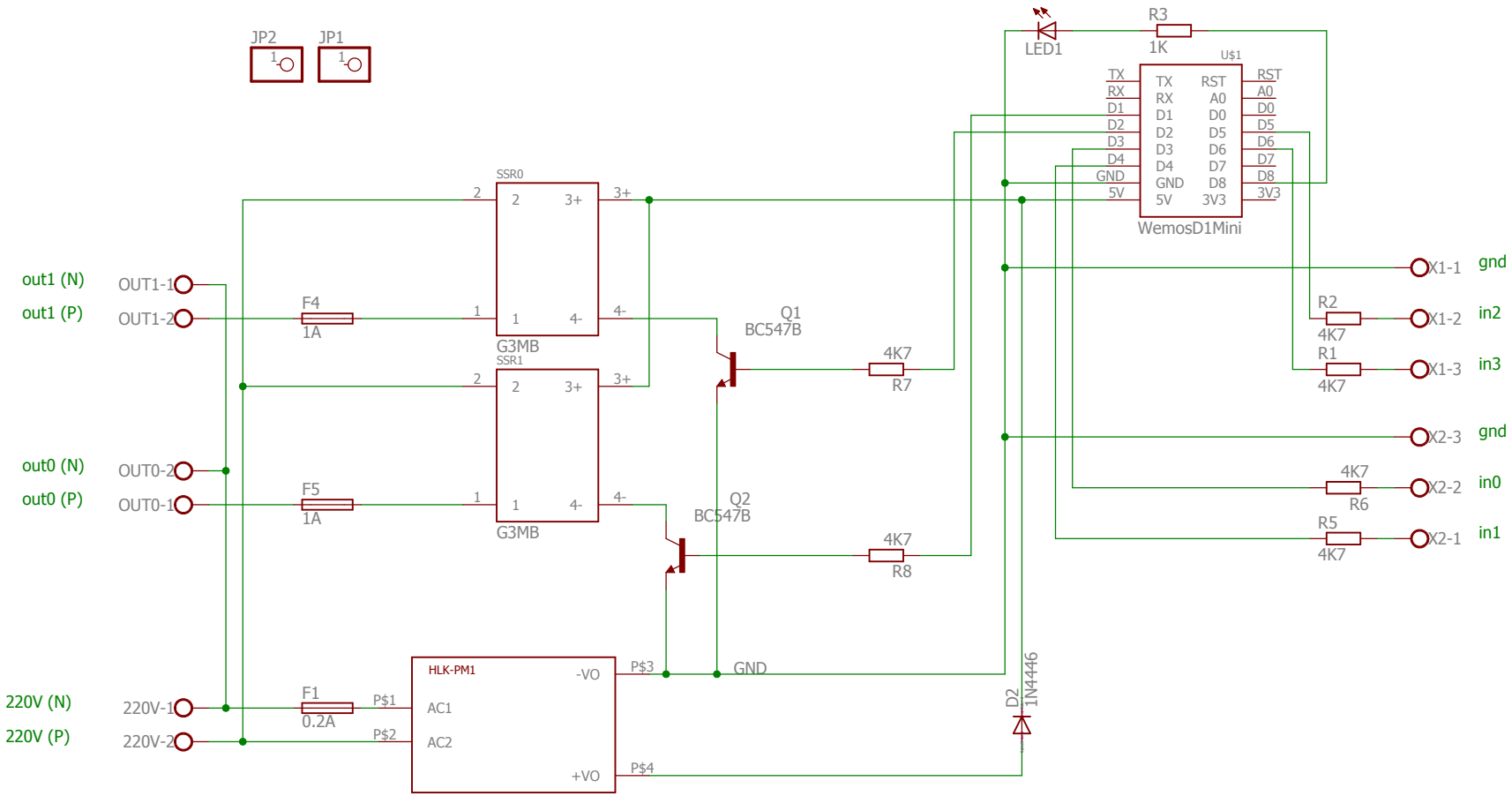

4/20/2016 23:57 C:\Users\simonjo\Documents\eagle\wiControl-ed04\wiControl-U02.sch (Sheet: 1/1)