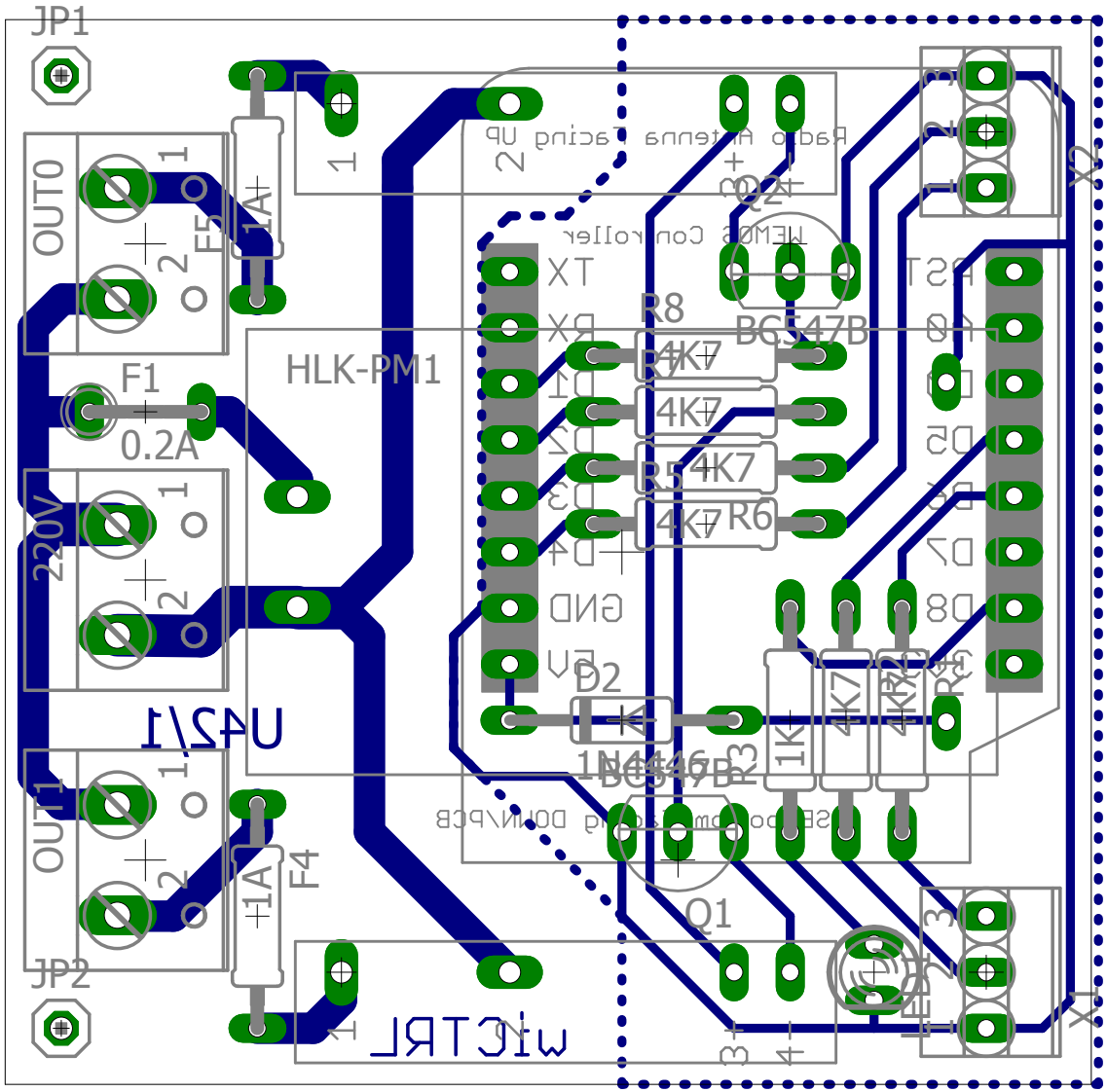

4/20/2016 23:59 f=3.00 C:\Users\simonjo\Documents\eagle\wiControl-ed04\wiControl-U02.brd